XD 2/415

fv 24/205

Aug. 22, 1933. B. GOEBEL 1,923,262

FASTENING DEVICE

Filed June 24, 1931

Fig. 3

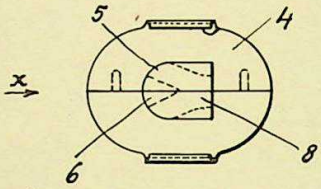


Fig. 4

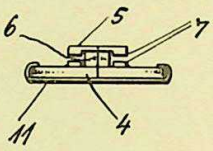


Fig. 1

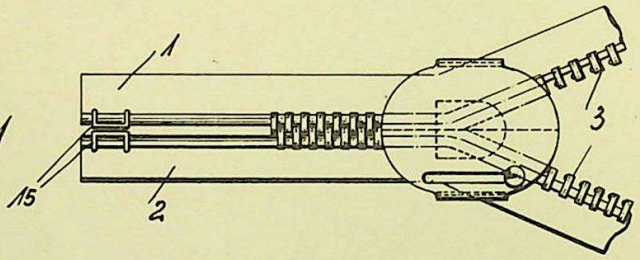


Fig. 2

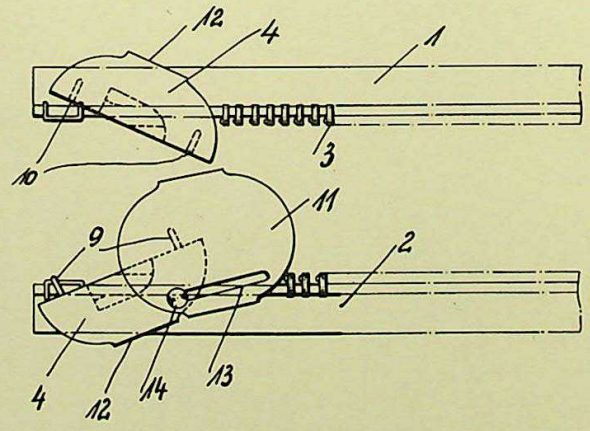


INVENTOR
Botho Goebel
BY Henry J. Lucke
HIS ATTORNEY

Patented Aug. 22, 1933 1,923,262

# UNITED STATES PATENT OFFICE

1,923,262

## FASTENING DEVICE

Botho Goebel, Leipzig, Germany, assignor to Karl Stöckel, Leipzig, Germany

Application June 24, 1931, Serial No. 546,469, and in Germany July 1, 1930

6 Claims. (Cl. 24—205)

My invention relates to a fastening device of the type comprising a plurality of fastening elements disposed on the opposite edges of the two parts to be connected, and a slidable member designed to be moved along the outer edges of the said fastening elements to bring them into or out of engagement. It has been found, however, that during the use of articles provided with such fastening devices individual units of the closed device become readily disengaged and, as the slidable member serving for opening and closing the device cannot be moved any more over these detached units and it is impossible therefore to open the device at and beyond this point, the necessity arises to separate the fastening device from the article, such as clothing and the like, to which it was attached.

To overcome these mistakes it has already been proposed to divide the sliding member into two or more separable sections so that after separating the sections, the fastening elements when in mutual engagement may be separated merely by withdrawing the bands which carry them. The known sliding members of this kind have not turned out well in practice as the sections into which the slider may be separated are not secured in firm position relative to one another so that their relative position varies. This maintenance of the exact relative position of the parts of the slide member is of importance in so far as the slightest variation in their relative position will have the result that the slide cannot be moved any more, or only with great difficulty, along the fastening members. Further the sections of the known sliders of this kind being stamped from sheet metal are springy whereby the closing action of the slider is impaired.

According to my invention, I use a casting slider consisting of two parallel plates interconnected by a wedgelike stud. This slider is symmetrically divided in its longitudinal axis. Pins and bores provided on the intersecting edges secure the sections against longitudinal displacement and suitable means serve for locking the sections relative to one another.

The invention further resides in the novel subject matter hereinafter described and claimed, one embodiment being illustrated in the accompanying drawing.

Figure 1 is a view of the fastening device in closed condition.

Fig. 2 shows the device when opened.

Fig. 3 is a bottom view of the slidable member and

Fig. 4 is a front view in the direction of the arrow X in Fig. 3.

Referring to the drawing, 1 and 2 are two flexible stringers or bands which on the edges facing each other carry the fastening elements 3 arranged so that the elements of one row can enter between the elements of the other row. The elements 3 are formed like small plates which have an elevation on one side and a depression on the other side. When the fastening elements of one row are brought into engagement with those of the other row, the elevations of the elements of one row enter into the depressions of the elements of the other row, so that the fastening elements thus engaged are locked relative to one another. The fastening elements of both rows are brought into and out of engagement by a slidable member which embraces both rows.

This slidable member consists of two plates 4 and 5 which are disposed parallel to one another and interconnected by a wedgelike web 6. By means of the ribs 7 provided on the sides of the plates 4 and 5 which face each other in connection with the wedgelike web 6 a forked channel 8 is formed between the plates 5 and 4 wherein the fastening elements 3 are guided, the ribs 7 being preferably formed by bending the edge of the plates.

The slidable member is divided into two equal parts in the longitudinal direction of the fastening device. One half of the member possesses at its dividing surface the pins 9 disposed vertically thereto while the other half is provided on the corresponding surface with the depressions 10 which receive the pins 9, the mutual engagement of the pins 9 and depressions 10 preventing displacement of the two halves relative to each other.

The two halves of the slidable member are firmly held together by a suitable closing appliance. In slidable members of the usual construction there would be very little guiding for the plate 11 to be attached and the two halves of the slide would therefore not be held together by it with sufficient firmness. For this reason the plate 4 is considerably larger than the plate 5 which in size and shape corresponds to the plates of ordinary slides. On an enlarged plate 4 the guide ribs 7 cannot be formed of course by bending the edges of the plate, and it will be necessary to provide special ribs 7 projecting from the plate 4. The enlargement of the plate 4 affords the added advantage that the pins 9 and the recesses 10 may be arranged at

a greater distance from one another to offer still greater security against the displacement of the two parts. The plate 4 has two edges 12 extending parallel to the sectional plane of the slidable member and is rounded at the ends. The parallel edges 12 serve as guides for the holding plate 11 to be attached which corresponds in shape to that of the plate 4 which is thus fully covered by the plate 11. With its bent edges the plate 11 grips also the underside of the plate 4 and is firmly held in position relative to the latter plate. If the novel fastening device is used, for example, for garments, the plate 4 with the covering plate 11 will be arranged on the outside of the garment and act in this case like a waist-clasp, it being possible of course to decorate the covering plate 11 by embossing, etching or the attachment of ornaments. The relatively large plate 4 can be conveniently gripped by the fingers to move the slide so that a special strap may be dispensed with.

The slidable member described can be detached in any position of the fastening device by withdrawing the plate 11 from the plate 4 whereupon the two halves of the slide can be taken apart, each half of the divided slide member being and remaining attached to the band or stringer whose fastening elements are guided in its edge 8. After the separation of the slidable member the entire fastening device can be opened merely by pulling the two bands. To prevent the plate 11 which holds together the two halves from getting lost during the disassembling of the slide member, it is guided by the longitudinal slot 13 in the plate 11 on the pin 14 provided with a head and secured to one part of the slide plate 4. To release the plate 11 from the two slide halves held together by it, it will be necessary at the end of the withdrawing motion to swing the plate 11 about the guide pin 14. To make this swinging motion possible, the edges of the plate 4 must be shaped correspondingly.

Since the elements of the fastening device can be interlocked only when in spread condition, no elements must be found in the two slide-halves when the latter are assembled or a part thereof will collide with their front sides and thus render a union of the two slide-halves impossible. For this reason the fastening elements 3 must not extend to the stop members 15 limiting the motion of the slide member but a free space corresponding to the length of the slide member must remain between the stop members 15 and the first fastening elements 3. Assembling of the two halves is quite simple and requires no special skill. After the two halves are joined together and secured by attaching the covering plate 11, the slide is moved towards the fastening members 3 which enter the channels 8 of the slider and are thus brought into engagement.

The detachable character of the slide member is of special importance for the so-called separable fasteners in which the two bands may be separated completely from one another instead of being firmly interconnected at the beginning in the usual manner. In the known types of separable fasteners one band must be pulled out of the slide which adheres to the other band so that it cannot get lost. The reintroduction of the band with the fastening members into the slide is quite bothersome and requires much time and some skill. When a separable slide according to the invention is employed, the band need not be re-introduced as each band carries one half of the slide in a manner preventing its loss.

I claim:—

1. In a fastening device of the class described a slidable member longitudinally divided in its center, pins and bores adapted to receive the pins arranged on the dividing surfaces of the two parts of the said slidable member to secure the two parts of the slidable member against longitudinal displacement with respect to each other, and a clamp overlapping the two halves from one side to lock them relative to one another against lateral displacement.

2. In a fastening device of the class described a slidable member longitudinally divided in its center, means for securing the two halves of the said slidable member against relative longitudinal displacement, a slotted covering plate overlapping the two halves from one side and adapted to be slipped thereon to lock them against lateral displacement, and a pin secured to one of the two halves and guided in the slot of the said covering plate, the said pin connecting the said covering plate with the half portion of the said slidable member.

3. In a fastening device of the class described a slidable member which consists of two parallelly arranged plates interconnected by a wedge-like stud and symmetrically divided in its longitudinal axis, pins and bores adapted to receive the pins arranged on the dividing surfaces of the two parts of the slidable member to secure the parts of the slidable member against longitudinal displacement, and a clamp overlapping the two halves from one side to lock them relative to one another against lateral displacement.

4. In a fastening device of the class described, a slidable member which consists of two parallel plates interconnected by a wedge-like stud and symmetrically divided in its longitudinal axis, means for securing the two halves of the said member against relative longitudinal displacement, a clamp overlapping the two halves from one side and adapted to be pushed upon the united halves to lock them against lateral displacement, the plate of the said member embraced by the said clamp being larger than the other plate of the said slidable member, and ledges at the underside of the said larger plate, positioned in front of and in front to back alignment with the bent side edges of the second smaller plate and forming with them a guide channel for the fastening elements.

5. In a fastening device of the class described a slidable member which consists of two parallel plates interconnected by a wedge-like stud and symmetrically divided in its longitudinal axis, means for securing the two halves of the said slidable member against relative longitudinal displacement, a slotted covering plate overlapping the two halves from one side and adapted to be pushed upon the united halves to lock them against lateral displacement, and a pin secured to one of the two halves and guided in the slot of the said covering plate, the said pin connecting the said covering plate with the half portion of the said slidable member.

6. In a fastening device comprising a pair of flexible stringers provided with interlocking elements on their opposing edges, said elements being arranged in staggered relation on opposite stringers, a slidable member comprising two parallelly arranged plates, a wedge-like stud interconnecting the same, the slidable member

being symmetrically divided along its longitudinal axis by a straight rectilinear cut performed in a plane vertical to the plane of the plates, pins projecting from the dividing surfaces of the plates at different points along the length thereof, and bores in the dividing surfaces to receive the pins to thereby secure the two parts of the slidable member against longitudinal displacement with respect to each other, and a clamp overlapping the two plates from one side to lock them relative to one another against lateral displacement.

BOTHO GOEBEL.

March 3, 1936. W. E. RIECKEN 2,032,438

SEPARABLE FASTENER

Filed May 29, 1933 2 Sheets-Sheet 1

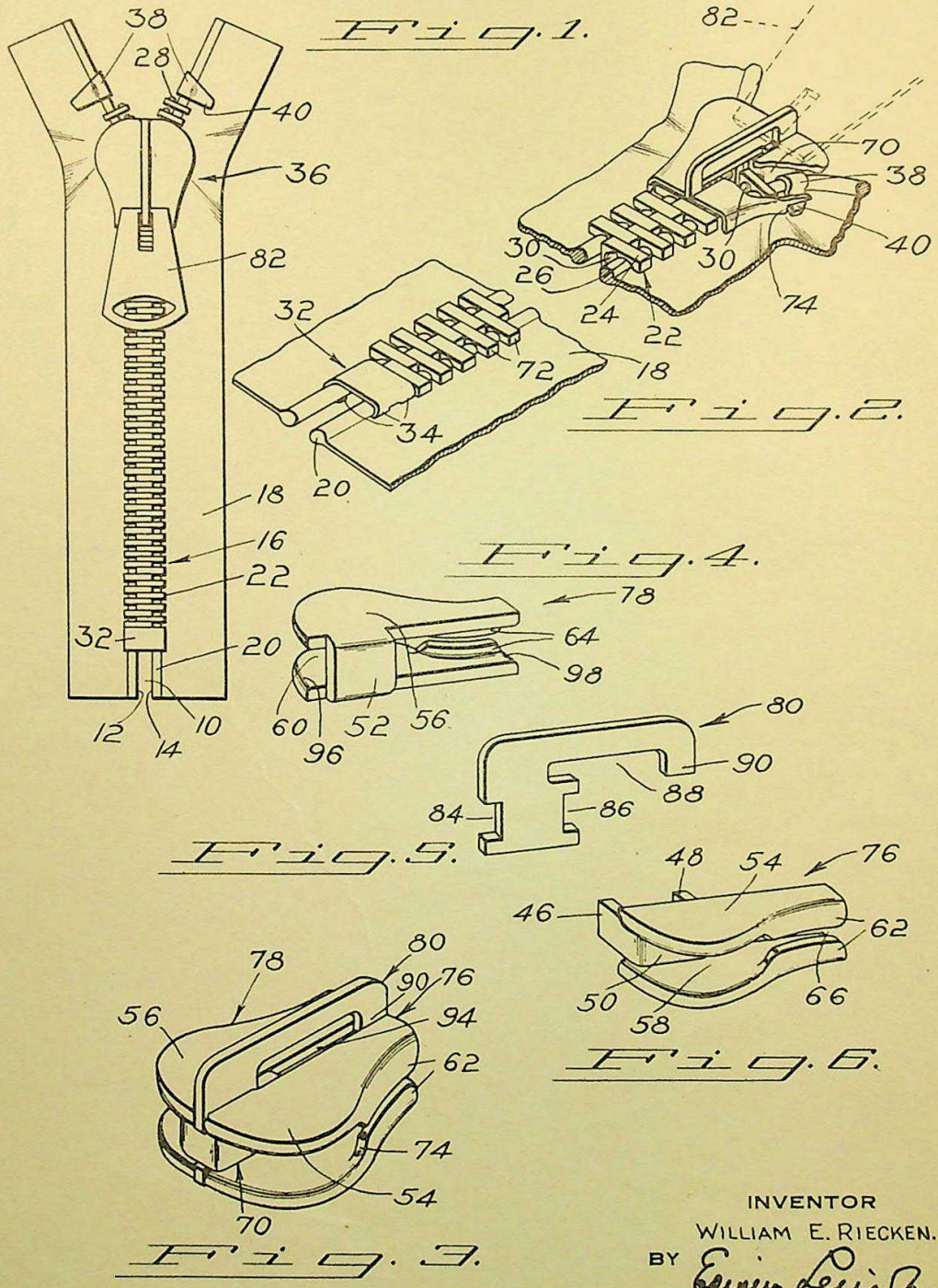


INVENTOR
WILLIAM E. RIECKEN.
BY Edwin Lewis
ATTORNEY

March 3, 1936. W. E. RIECKEN 2,032,438

SEPARABLE FASTENER

Filed May 29, 1933 2 Sheets-Sheet 2

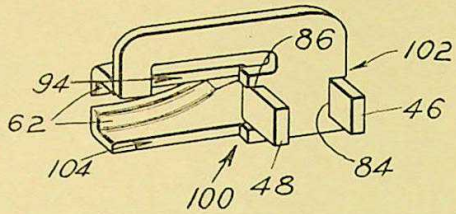


Fig. 7.

Fig. 10.

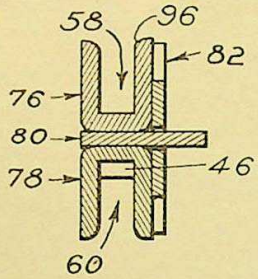


Fig. 9.

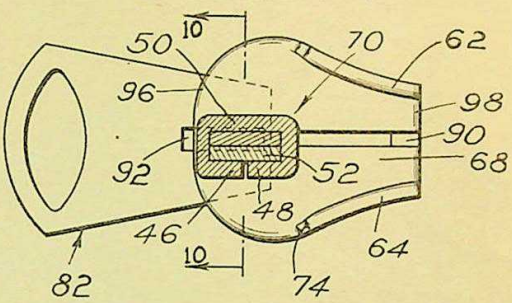


Fig. 8.

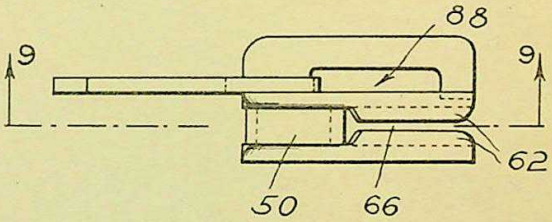


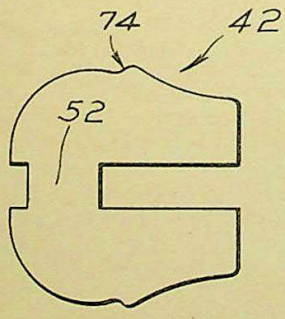


Fig. 11.

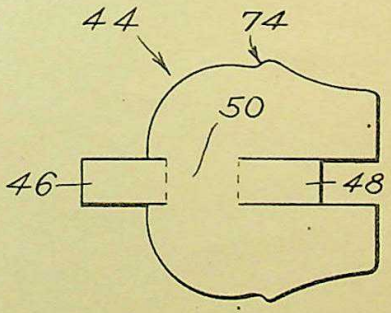


Fig. 12.

INVENTOR
WILLIAM E. RIECKEN.
BY Edwin Leisler
ATTORNEY

Patented Mar. 3, 1936 2,032,438

# UNITED STATES PATENT OFFICE

2,032,438

## SEPARABLE FASTENER

William E. Riecken, Leonia, N. J., assignor to Standard Products Corporation, New York, N. Y.

Application May 29, 1933, Serial No. 673,356

21 Claims. (Cl. 24—205)

This invention relates to separable fasteners. In some of its aspects, the invention to be described will be understood to have application in relations other than where specific elements to be illustrated are used. In the specific description, the invention is illustrated as applied in connection with that type of the fastener commonly known as the "zipper". In such a fasener, customary, but not necessary, construction includes a plurality of identically constructed elements, secured to the edges of adjacent flexible tapes which define the margins of an opening to be opened and closed by the fastener. Received over these elements, in order to facilitate the manipulation of the several elements to engagement in interlocked relationship, and separation from that relationship, is a slide. It is an object of the invention to provide a slide for this purpose which is simple in its construction, and lends itself easily and effectively to manufacture from sheet metal. In this relation, a feature of a specific form of the slide is that it may be laid out and assembled substantially entirely by automatic machinery.

In the specific form of slide just mentioned, a plurality of stampings from sheet metal are used. Each of two of the stampings is shaped or otherwise formed to define in itself a distinct channel through which the interlocking elements are to move as the slide travels relatively along the margins of the opening. These channel-defining sections may be formed separately and distinctly; when united, however, and by the very manner of union, they are caused to define a single unitary and complete slider, in which a passage is defined, by the conjunction of the sections, through which passage, the elements, when interlocked, may pass.

Each channel-defining section includes a wall from which extends a pair of wings. The walls of the sections are brought together and are so formed and secured that the channels defined by the sections merge into a single passageway. For securing together the walls, and, therefore, the sections, one of the walls may have, as an integral part thereof, prongs which are extended to engage around the wall of the other section.

To position, in association with slides useful for the purpose indicated, means for carrying a pull-piece for facilitating the manipulation of the slide, a plate is positioned between the sections when they are brought together. By the manner in which the sections are united, this plate also is bound into the assembly and is fixedly retained. This plate, by its formation, or by its cooperation with the wings of the sections, functions as means for retaining a pull-piece. Also, this plate lends to the slide, as a whole, additional rigidity, strengthening a portion of the slide against which considerable force is applied during use of the fastener. The plate and its associated walls and prongs form the entering wedge for separating the interlocked elements.

In fasteners of this general character, in which a slide manipulates the elements to interlocked and separated relation, to make the device practical for general application, complete removal of the slide from the margins of the openings, at the fully closed position, is prevented. In the structure here described, stop elements, positioned on one or both of the margins, are constructed to engage with one or more of the wings. The wings at their edges may have provided flanges to assist in defining the channels. The abutment of the stop element may be with such a flange which, in one embodiment, is cut away so that the stop element may enter within the particular channel. The cutaway portion may be dimensioned so that the slide will be brought to a complete halt when the stop is housed substantially out of view between the wings.

Other objects of this invention will hereinafter be set forth, or will be apparent from the description and the drawings, in which is illustrated an embodiment of apparatus for carrying out the invention.

The invention, however, is not intended to be restricted to any particular construction or arrangement of parts, or to any particular application of such construction, or to any specific manner of use, or to any of various details herein shown and described, as the same may be modified in various particulars or be applied in many varied relations without departing from the spirit and scope of the claimed invention, the practical embodiment herein illustrated and described merely showing one of various forms and modifications in which the invention might be embodied.

On the drawings, in which the same reference characters refer to the same parts throughout, and in which an illustrated construction is disclosed;

Fig. 1 is a plan view of an arrangement embodying the invention in which a separable fastener is applied to an opening;

Fig. 2 is an enlarged view, in perspective, illustrating the manner in which slide and stop elements cooperate at fully closed position;

Fig. 3 is a perspective view of the slide, a detail of the embodiment of the invention;

Figs. 4, 5 and 6 are perspective views of dissociated elements of the slide;

Fig. 7 is a perspective view, illustrating the manner in which one of the channel-defining sections and the plate are assembled before the final associations;

Fig. 8 is an elevational view of the slide;

Fig. 9 is a cross-sectional view, on the line 9—9 of Fig. 8;

Fig. 10 is a cross-sectional view, on the line 10—10 of Fig. 9; and

Figs. 11 and 12 are plan views of blanks for the formation of the channel sections.

In Fig. 1, an opening 10 is shown to have associated with its margins 12 and 14, a separable fastener 16. The margins may be defined by flexible tapes 18 having beaded edges 20 upon which are secured interlocking elements 22. The elements on both tapes, in this particular case, are shown to be identical in construction. Each element includes a body portion 24 having jaws 26 received and clamped over a beaded edge 20. The projecting end of each element has extending from one face a rounded nub 28, while in the other face is formed a complementary recess 30. In the customary operation of such fasteners, nubs 28 of elements on one tape seat within recesses 30 of staggeredly opposed elements on the other tape.

In this case, a stop 32 at full open position is engaged with both tapes. Prongs 34 extending from the stop and through the tapes retain the tapes against separation from each other at that position when slide 36 moves to fully opened position and separates all the elements. The stop, engaging with the slide for that purpose, prevents its further movement.

At fully closed position, one or a pair of stops 38 are provided. Where a pair is used, one is stationed on each tape. Each stop is secured to the beaded edge in any preferred manner so as to provide an abutment 40 which extends beyond the extremities of elements 22. The stops, for this purpose, may be of a piece of flat metal, bent into a U-shape, the arms of the U being engaged over the beaded edge. One or both of the arms may be made long enough to form an abutment 40.

The slide 36 here illustrated is made up from a plurality of stampings, two of which are used to define channels for the reception of elements 22. Blanks 42 and 44 may be stamped out as a part of the stages of manufacture of these elements. Blank 42, as seen from Figs. 11 and 12, is substantially similar to blank 44 except that, with the completion of cutting out blank 44, it includes prongs 46 and 48 in addition to the metal of blank 42. These prongs are, by the method of formation, left in a state of separation from wall 50 of the blank so that the blank may be worked into the form shown in Fig. 6.

Both blanks are, by automatic machinery or in any other desired manner, bent over so that, with respect to their intermediate wall portions 50 and 52, wings 54 and 56 will extend away substantially in parallel relationship, and preferably in planes substantially at right angles to walls 46 and 48. When so arranged, wings and walls define channels 58 and 60. At least along the wings, at certain portions in the extent of their edges, the metal is bent or reflexed to bring the opposed metallic edge portions into a position where they are directed toward each other. The portions may be in the nature of flanges 62 and 64. These flanges, or similar means, thus substantially close the channels at the sides of the slides, with the exception of slits 66, provided by the spaced-apart edges of the flanges so that the tapes may extend into the channels. The flanges are required at the point where the channels merge into the single passage 68. This, as can be seen from the drawings, is immediately beyond the separating wall 70 produced in the manner to be described.

The flanges, when the slide is positioned as in Figs. 1 and 2, rest immediately over tapes 18 upon which the slide is guided. The flanges engage the inner faces 72 of the elements and thus drive the elements toward each other so that nubs 28 will be cammed into position to enter their related recesses 30. As can be seen from the drawings, the flanges are formed so that a pair of flanges 62 and 64 converge toward each other substantially from points immediately adjacent the terminus of each of the channels 58 and 60 to the merged single passage 68.

The stopping of the slide at fully closed position may be effected by the engagement of the forward edge or face or faces 74 of one or more of these flanges with an abutment or abutments 40. In one type of slide, designed to give a more workmanlike appearance to the entire arrangement when the fastener is completely closed, flanges 62 and 64 terminate short of the complete divergence of channels 58 and 60. In fact, as shown in Fig. 9, the forward faces 74 are substantially at the same position, as projected on the longitudinal center-line of the slide, as the entering face of wall 70. Stops 38 are thus enabled to move into the slide, in which case the abutments will engage with flange faces 74 when the stops are substantially or completely housed within channels 58 or 60, as shown in Fig. 2.

Sections 76 and 78, that is, the members formed by bending blanks 42 and 44 into the forms shown in Figs. 4 and 6, are united by bringing prongs 46 and 48 immediately around wall 52, and then bending the prongs to engage firmly against the inner face of that wall. The sections will then be bound firmly together, wall portions 50 and 52, and the binding prongs, defining separating wall 70. As shown in Fig. 2, wall 70 acts, as the slide moves to open the fastener, to drive elements 22 into separated relationship. Also a pair of wings 54 and 56 cooperate to define a plate substantially effectively in a single plane, as seen from Figs. 3, 8 and 10.

A plate 80 may be assembled with sections 76 and 78 in order to stiffen and rigidify the entire arrangement. At the same time, this plate may be utilized to provide means for retention of a pull-piece 82. Plate 80, as shown, is provided with a plurality of notches 84, 86 and 88. Notches 84 and 86 are dimensioned and arranged so that prongs 46 and 48, when bent as shown in Fig. 7, may be extended through and set within them. By this construction, provision is made for the reception of plate 80 between walls 50 and 52 in the final assembly. Then, when the prongs are bent and engaged around wall 50, plate 80 also will be retained, firmly and fixedly associated with the slide.

Notch 88, by this arrangement of the plate, is positioned in relation to top wings 54 and 56 to form with those wings what is, in fact, a slot. In assembling plate 80, pull-piece 82 is first slid over projecting end 90 of the plate by bringing into registry with that end an opening 92 cut through, or formed by slotting, the pull-piece. Then the plate is secured into its relationship to

the sections, whereupon the pull-piece is located permanently upon the slide. A somewhat similar effect may be produced by cutting a slot in the plate, in place of notch 88. In such case, the pull-piece would have opening 92 bounded by a pair of prongs for reception within the slot, the location of the prongs being accomplished by any suitable method or means, as by bending them out of and then into alignment when inserting them, and after they have been inserted, into the opening.

The pull-piece, in either case, may be permitted movement relatively to the plate, and, therefore, to the slide, in accordance with the length of the opening provided by notch 88.

Projecting end 90 may be extended within slot 94 left between top wings 54 and 56. The insertion of end 90 into the slot has been found to set up a sufficient rigidifying force to counteract lateral stresses tending to distort the united sections from their fixed relationship.

The slide may be finished by bevelling entering edges 96 and 98 to facilitate the movement of the elements into and out of the slide. Walls 70 may have imparted to it, in addition to the rounded formation arising from bending the prongs into position, an additional wedging formation to assure separating action as the slide moves down upon the elements.

It will be noted from Fig. 7 that the position of the plate, with its shouldered formations 100 and 102, formed by notches 84 and 86, and introduced within slots 94 and 104 between the separated sections at bottom and top, materially strengthen and brace the entire construction.

Many other changes could be effected in the particular apparatus designed, and in the methods of operation set forth, and in specific details thereof, without substantially departing from the invention intended to be defined in the claims, the specific description herein being merely to illustrate an embodiment which successfully demonstrates the spirit of the invention.

What is claimed as new and useful is:—

1. A slide for use in conjunction with a separable fastener which includes a pair of tapes carrying a plurality of elements to be interlocked and separated, the slide consisting of a pair of initially separate members cooperating to define a channel for receiving the tapes and the elements, and means embraced by the members for maintaining the members in operative relation to each other, said means having a fixed portion within said channel and said members having initially independent fixed portions within said channel interconnected with the fixed portion of said means in fixed relation thereto for preventing relative lateral and longitudinal motion of said members.

2. A slide for use in conjunction with a separable fastener which includes a pair of tapes carrying a plurality of elements to be interlocked and separated, the slide consisting of a pair of initially separate members cooperating to define a channel for receiving the tapes and the elements, and means engaged by and between the members for maintaining the members in operative relation to each other, said means having a fixed portion within said channel and said members having initially independent fixed portions within said channel interconnected with the fixed portion of said means in fixed relation thereto for preventing relative lateral and longitudinal motion of said members, the maintaining means including means for retaining a pull-piece for the slide.

3. A slide for use in conjunction with a separable fastener which includes a pair of tapes carrying a plurality of elements to be interlocked and separated, the slide consisting of a pair of initially separate members cooperating to define a channel for receiving the tapes and the elements, and means engaged by the members for maintaining the members in operative relation to each other and dividing the channel, the said means having a fixed portion within said channel and said members having initially independent fixed portions within said channel interconnected with the fixed portion of said means in fixed relation thereto for preventing relative lateral and longitudinal motion of said members, the maintaining means cooperating with the members to define means for retaining a pull-piece for the slide.

4. A slide for use in conjunction with a separable fastener which includes a pair of tapes carrying a plurality of elements to be interlocked and separated, the slide comprising a pair of initially separate members, each member including a pair of spaced apart wings to define a channel for receiving a tape and its associated elements, and means between and engaged by the members for positioning the wings of the members in co-extensive relationship, said means having a fixed portion within said channel and said members having initially independent fixed portions within said channel interconnected with the fixed portion of said means in fixed relation thereto for preventing relative lateral and longitudinal motion of said members.

5. A structure for defining a slide for a separable fastener including a plurality of separable elements, the slide including a pair of initially separate members, each of the members including a wall and a pair of wings extending away from the wall to define therewith an individual channel for the passage of elements therethrough, means integral with the wall of one of said members and engageable with the wall of the other member between the wings of the latter for anchoring the walls to each other and forming a unitary entering wedge, the channels being tapered toward one end thereof and the walls terminating short of said end to unite the channels into a single passage for elements from both channels but of less width than the total width of the two separated channels, and means carried by the wings to guide into overlapping arrangement elements moving into said single passage.

6. A structure for defining a slide for a separable fastener including a plurality of separable elements, the slide including a pair of initially separate members, each of the members individually defining a channel for the passage of elements therethrough, a plate positioned between the members, means for securing the members together to retain the plate therebetween, said means having a fixed portion within said channel and said members having fixed portions initially independent of each other positioned within said channel and interconnected with the fixed portion of said means in fixed relation thereto for preventing relative lateral and longitudinal motion of said members and extensions for each member to define continuations of the channels but of more restricted extent, the members being secured together so that the channel continua-

tions unite and form a single passage for elements from both channels.

7. A structure for defining a slide for a separable fastener including a plurality of separable elements, the slide including a pair of initially separate members, each of the members individually defining a channel for the passage of elements therethrough, a plate positioned between the members, means for securing the members together to retain the plate therebetween, said means having a fixed portion within said channel and said members having fixed portions initially independent of each other positioned within said channel and interconnected with the fixed portion of said means in fixed relation thereto for preventing relative lateral and longitudinal motion of said members and extensions for each member to define continuations of the channels but of more restricted extent, the members and the plate being secured together and the plate being formed so that the channel continuations unite and form a single passage for elements from both channels.

8. A structure for defining a slide for a separable fastener including a plurality of separable elements, the slide including a pair of initially separate members, each of the members individually defining a channel for the passage of elements therethrough, a plate, and means for securing the members and the plate together to define a single wall separating the channels, said means having a fixed portion within said channel and said members having fixed portions initially independent of each other positioned within said channel and interconnected with the fixed portion of said means in fixed relation thereto for preventing relative lateral and longitudinal motion of said members, the channels being tapered toward one end thereof and the walls being cut away to unite the channels into a single passage of less width than the total width of the two separated channels for elements from both channels, the plate providing means for manipulating the slide.

9. A structure for defining a slide for a separable fastener including a plurality of separable elements, the slide including a pair of initially separate members, each of the members individually defining a channel for the passage of elements therethrough, a plate, and means for securing the members and the plate together to define a single wall separating the channels, said means having a fixed portion within said channel and said members having fixed portions initially independent of each other positioned within said channel and interconnected with the fixed portion of said means in fixed relation thereto for preventing relative lateral and longitudinal motion of said members, the channels being tapered toward one end thereof and the walls being cut away to unite the channels into a single passage of less width than the total width of the two separated channels for elements from both channels, the plate providing means for supporting manipulating means for the slide.

10. A structure for defining a slide for a separable fastener including a plurality of separable elements, the slide including a pair of separate members, each of the members including a wall and a pair of wings extending away from the wall to define an individual channel for the passage of elements therethrough, a plate, means extending from one of the walls and encompassing a portion of the plate and engaging the other wall to secure the walls and the plate together to define a single wall separating the channels, the channels being tapered toward one end thereof and the walls and the plate being cut away to unite the channels into a single passage of less width than the total width of the two separated channels for elements from both channels, and means carried by the wings to guide the elements moving into the passage.

11. A structure for defining a slide for a separable fastener including a plurality of separable elements, the slide including a pair of separate members, each of the members including a wall and a pair of wings extending away from the wall to define an individual channel for the passage of elements therethrough, a plate, and prongs extending from one of the walls, encompassing a portion of the plate, and engaging the other wall to secure the wall and the plate together to define a single wall separating the channels, the channels being tapered toward one end thereof and the walls and the plate being cut away to unite the channels into a single passage of less width than the total width of the two separated channels for elements from both channels.

12. A structure for defining a slide for a separable fastener including a plurality of separable elements, the slide including a pair of separate members, each of the members including a wall and a pair of wings extending away from the wall to define an individual channel for the passage of elements therethrough, said walls being initially independent of each other, a plate, and means extending from one of the walls and encompassing a portion of the plate and engaging the other wall to secure the walls and the plate together to define a single wall separating the channels, the channels being tapered toward one end thereof and the walls and the plate being cut away to unite the channels into a single passage of less width than the total width of the two separated channels for elements from both channels.

13. A slide for use in separating from and bringing into engaged relationship the interlocking elements of a separable fastener, the slider including a pair of initially separate members, each of the members including a pair of wings and a wall, said walls being initially independent of each other, the walls being positioned so that the wings of the members extend in opposite directions, a plate positioned between the walls and extending beyond the wings, and plate-and-wall-embracing means for securing the walls and plate in that relationship.

14. A slide for use in separating from and bringing into engaged relationship the interlocking elements of a separable fastener, the slider including a pair of separate members, each of the members including a pair of wings and a wall, the walls being positioned so that the wings of the members extend in opposite directions, one of the walls having prongs extending therefrom, said prongs being reflexed and fixedly engaging the other wall between the wings of the latter for securing the walls in that relationship.

15. A slide for use in separating from and bringing into engaged relationship the interlocking elements of a separable fastener, the slider including a pair of separate members, each of the members including a pair of wings and a wall, the walls being positioned so that the wings of the members extend in opposite directions, and a plate positioned between the walls and extending beyond the wings, one of the walls having prongs extending therefrom, said prongs be-

ing extended to engage the other wall for securing the walls and the plate in that relationship.

16. A slide for use in separating from and bringing into engaged relationship the interlocking elements of a separable fastener, the slider including a pair of separate members, each of the members including a pair of wings and a wall, the walls being positioned so that the wings of the members extend in opposite directions, and an L-shaped plate, one arm of the plate being positioned between the walls and the other arm extending beyond the wings, one of the walls having prongs extending therefrom, said prongs being extended to engage the other wall for securing the walls and the plate in that relationship.

17. A slide for use in separating from and bringing into engaged relationship the interlocking elements of a separable fastener, the slider including a pair of separate members, each of the members including a pair of wings and a wall, the walls being positioned so that the wings of the members extend in opposite directions, and an L-shaped plate, one arm of the plate being positioned between the walls and the other arm extending beyond the wings, the arm positioned between the walls having kerfs formed therein, one of the walls having prongs extending therefrom, said prongs being extended through the kerfs and engaging the other wall for securing the walls and plate in that relationship.

18. A slide for use in separating from and bringing into engaged relationship the interlocking elements of a separable fastener, the slider including a pair of separate members, each of the members including a pair of wings and a wall, the walls being positioned so that the wings of the members extend in opposite directions, and an L-shaped plate, one arm of the plate being positioned between the walls and the other arm extending beyond the wings, the arm positioned between the walls having kerfs formed therein, one of the walls having prongs extending therefrom, said prongs being extended to seat in the kerfs and to engage the other wall for securing the walls and plate in that relationship.

19. A slide for use in separating from and bringing into engaged relationship the interlocking elements of a separable fastener, the slider including a pair of separate members, each of the members including a pair of wings and a wall, the walls being positioned so that the wings of the members extend in opposite directions, and an L-shaped plate, one arm of the plate being positioned between the walls and the other arm extending beyond the wings, the arm extending beyond the wings having a recess formed therein, said recess cooperating with the wing faces to provide means for retaining a bail for the slide, one of the walls having prongs extending therefrom, said prongs being extended to engage the other wall for securing the walls and the plate in that relationship.

20. A slide for use in separating from and bringing into engaged relationship the interlocking elements of a separable fastener, the slider including a pair of separate members, each of the members including a pair of wings and a wall, the walls being positioned so that the wings of the members extend in opposite directions, and an L-shaped plate, one arm of the plate being positioned between the walls and the other arm extending beyond the wings, the arm positioned between the walls having kerfs formed therein, the arm extending beyond the wings having a recess formed therein, said recess cooperating with the wing faces to provide means for retaining a bail for the slide, one of the walls having prongs extending therefrom, said prongs being extended through the kerfs and engaging the other wall for securing the walls and plate in that relationship.

21. A slide for use in separating from and bringing into engaged relationship the interlocking elements of a separable fastener, the slider including a pair of separate members, each of the members including a pair of wings and a wall, the walls being positioned so that the wings of the members extend in opposite directions, and an L-shaped plate, one arm of the plate being positioned between the walls and the other arm extending beyond the wings, the arm positioned between the walls having kerfs formed therein, the arm extending beyond the wings having a recess formed therein, said recess cooperating with the wing faces to provide means for retaining a bail for the slide, one of the walls having prongs extending therefrom, said prongs being extended to seat in the kerfs and engage the other wall for securing the walls and plate in that relationship.

WILLIAM E. RIECKEN.

XD2-415 The Vogue - Sept 15, 1938 Page 16b ~~XD17-8.1~~

# Schiaparelli Surprises Paris

*...with the new Zipper that Glides!*

*Schiaparelli's dramatic crêpe evening dress, molded with Crown Mosaic Zipper*

*Schiaparelli fastens her flannel sports blouse with a Crown Mosaic Zipper*

*A Crown Mosaic Zipper streaks down Schiaparelli's crêpe afternoon dress*

Sketched in Schiaparelli's Paris Salon

RETURN TO DESIGN DIV

Schiaparelli, crack Paris designer, takes an American brain child . . . Crown Mosaic Zipper . . . and makes it a sensation of her new collection. Its rich blending shades are perfect with the season's front-rank colors. Its compact elements are molded, not stamped or cut, to give smooth "gliding" action . . . marvelous streamline fit . . . and flexibility. You'll find Crown Zippers on Schiaparelli creations and other leading Fall fashions in better stores. Crown Zippers are supplied by The Spool Cotton Company, 350 Fifth Ave., N. Y. C., distributors of J. & P. Coats and Clark's O.N.T. products.

**CROWN ZIPPER**

(Bulldozers)

RETURN TO
DESIGN DIV

RETURN TO
DESIGN DIV

Oct. 27, 1942. N. J. POUX 2,299,846

PULL TAB FOR SLIDE FASTENER SLIDERS

Filed Aug. 24, 1939

Fig. 1.

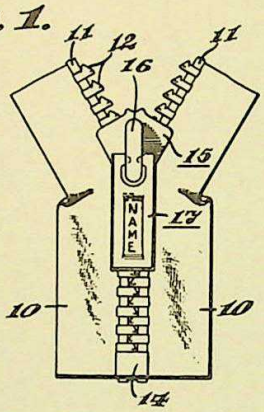


Fig. 2.

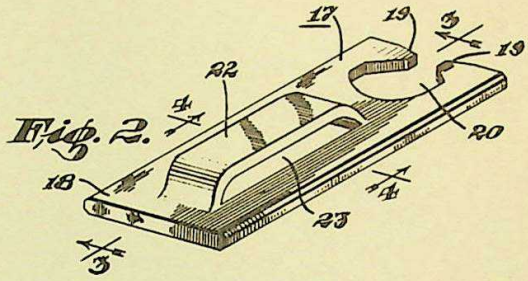


Fig. 4.

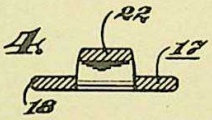


Fig. 3.

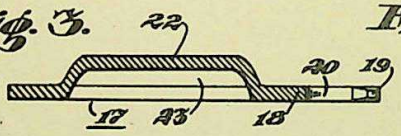


Fig. 5.

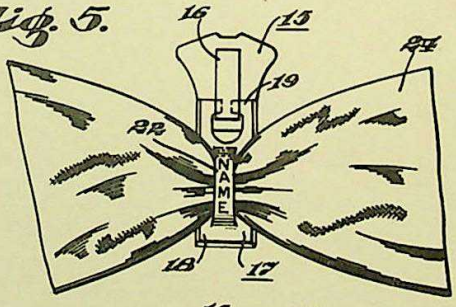


Fig. 7.

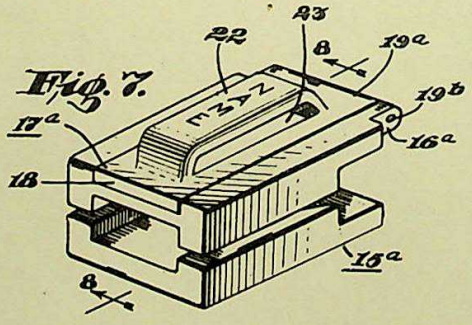


Fig. 6.

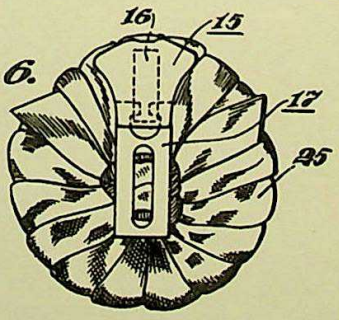


Fig. 8.

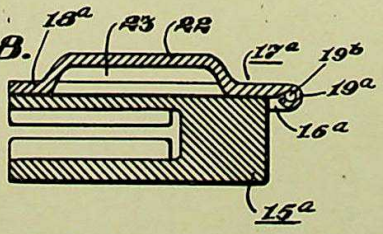


INVENTOR.
Noel J. Poux.
BY R. S. Kelley
ATTORNEY.

Patented Oct. 27, 1942 2,299,846

# UNITED STATES PATENT OFFICE

2,299,846

## PULL TAB FOR SLIDE FASTENER SLIDERS

Noel J. Poux, Meadville, Pa., assignor to Talon, Inc., a corporation of Pennsylvania

Application August 24, 1939, Serial No. 291,708

2 Claims. (Cl. 24—205)

This invention relates to pull tabs for slide fastener sliders, which pull tabs are also known in the art as pull members, finger tabs, handles, pull devices, finger pieces, tabs, tongues, operating tabs, pull pieces, thumb tabs, etc.

It is an object of this invention to provide a pull tab construction embodying substantial strength, simplicity of design and ease of manufacture.

It is a further object of this invention to provide such a construction which embodies integral means facilitating attachment to the pull tab of thongs, ribbons, straps and other tension members of width substantially greater than the width of the pull tab proper.

It is a further object of this invention to provide a pull tab construction adapted particularly to harmonize with conventional slide fastener slider constructions to which it is applicable.

It is a further object of this invention to provide, in such a construction, means adapted to secure the above advantages and, in addition thereto, fully to display suitable indicia of origin or trade names irrespective of the attachment of thongs, ribbons, straps, etc., to the pull tab.

These and other objects and advantages of the invention will appear from the following description taken in conjunction with the accompanying drawing which forms a part thereof, and will be pointed out in the appended claims.

In the drawing:

Fig. 1 is a fragmentary plan view of a conventional slide fastener showing the application of a pull tab construction according to this invention to the slider thereof;

Fig. 2 is a view, in perspective, of the pull tab construction illustrated in Fig. 1;

Fig. 3 is a longitudinal section of the pull tab construction illustrated in Fig. 2, taken substantially on the line 3—3 of Fig. 2;

Fig. 4 is a transverse section of the pull tab construction illustrated in Fig. 2, taken substantially on the line 4—4 of Fig. 2;

Fig. 5 is a front view of the pull tab construction shown in Figs. 1 to 4, as applied to a conventional slider as shown in Fig. 1, and showing the attachment to the pull tab of a ribbon substantially wider than the pull tab proper;

Fig. 6 is a view similar to Fig. 5 of the back of the pull tab construction illustrated in Fig. 5 and showing the application to the pull tab construction of a rosette adapted to cover the slider and pull tab construction of a slide fastener;

Fig. 7 is a perspective view of a modified slide fastener slider showing the application thereto of a pull tab construction according to this invention; and

Fig. 8 is a longitudinal view of the structure shown in Fig. 7, taken substantially on the line 8—8 of Fig. 7.

Referring to the drawing in detail and with reference particularly to Fig. 1, it will be seen that the slide fastener therein illustrated comprises a pair of suitable tapes 10 suitably reinforced at their adjacent edges 11 and having secured to the reinforced edges cooperating slide fastener members or scoops 12, the lower end portions of the reinforced edges 11 being secured together by suitable bottom stop means 14.

Slidable with respect to the slide fastener members 12 is a known form of slider 15 provided with a longitudinal, centrally disposed lug 16 having undercut side surfaces providing for attachment to the slider 15 and lug 16, of the pull tab construction 17 of this invention, hereinafter described in detail.

The sliding movement of the slider 15 with respect to the stringers formed by the connected tapes 10 and supported slide fastener members 12 is accomplished by manual engagement of the pull tab 17 in known manner.

The pull tab construction of this invention, as shown in Figs. 1 to 6, comprises an elongated plate-like body 18 having hinge means integrally formed at the upper end thereof. The hinge means comprises a pair of pivot projections 19 directed inwardly toward one another and formed by cutting out from the material of the body 18 an aperture 20 and communicating channel 21 which extends from the aperture 20 outwardly to the upper end of the elongated plate-like body 18.

The plate-like body 18 is provided, below the aperture 20, with an upraised centrally disposed, longitudinal lug or strap 22, preferably of length substantially greater than the width of the elongated plate-like body 18. This lug or strap 22 is preferably disposed concentrically with respect to the main portion of the plate-like body 18 below the aperture 20, as shown particularly in Figs. 1, 5 and 6. This lug or strap 22 forms a longitudinal strengthening member offset upwardly from the plane of the plate-like body 18 and substantially increasing the rigidity and strength thereof. The end portions of the lug or strap 22 are inclined gently downwardly to the body 18, as shown particularly in Figs. 3 and 4. The main portion of the lug or strap 22 is parallel and spaced upwardly from the plate-

like body 18, as also shown in Figs. 3 and 4, and this disposition of the central or main portion of the lug or strap 22 forms a pair of slots or slot-like apertures 23 through which suitable tension means such as ribbons, thongs, etc., of width substantially greater than the width of the body 18 may extend, as shown particularly in Figs. 5 and 6.

As shown in Fig. 5, a length of ribbon 24 is inserted transversely through the slots 19 to form with the lug 22 a decorative design similar to a conventional bow. As also shown in Fig. 5, as well as in Fig. 1, the main portion of the lug 22 may be provided with suitable indicia of origin, trade name, or the like, as indicated by "Name" shown thereon in Figs. 1 and 5.

Fig. 5 also illustrates the manner in which the pull tab 17 harmonizes with the slider 15 due to the similarity of the lug 16 of the slider 15 and the lug or strap 22 of the pull tab 17. The length of the slots 23 is substantially greater than the width of the body 18, as described above, and the inclination of the end portions of the lug or strap 22 forms wedge portions adjacent the ends of the slots 23 which effectively prevent derangement of various thongs, ribbons or other tension means extending through the slots 23 and disposed between the lug or strap 22 and the body 18 of the pull tab 17.

As shown in Fig. 6, the pull tab construction of this invention lends itself admirably to the formation of rosettes and other decorative devices formed of ribbon 25 or other suitable material. As shown in Fig. 6, the rosette, which is substantially circular, and which is formed of relatively narrow ribbon 25 is of such size as substantially to cover the slider 15 and pull tab 17 when viewed from the front of the fastener.

In the modified form of pull tab 17*a*, shown in Figs. 7 and 8, the aperture 20 and channel 21 are omitted from the platelike body 18*a* and the upper end portion of the body 18*a* is bent over upon itself to form a hinge loop 19*a* adapted to receive a pintle pin 19*b* having its end portions secured in lugs 16*a* formed integrally with the front wing of the slider 15*a*. The front wing of the slider 15*a* is also provided with a longitudinal, substantially rectangular recess adapted to receive the elongated plate-like body 18 in countersunk relationship as shown in Figs. 7 and 8.

The cooperation of this form of pull tab with the illustrated type of recessed slider 15*a* makes the pull tab construction more a part of the slider than has been possible with other known forms of pull tab constructions because projection of the upwardly offset lug or strap 22 and formation of the transverse slots 23 formed thereby make possible the convenient attachment of ribbons, thongs and other tension means to the pull tab without the necessity for projection of the pull tab longitudinally beyond the slider body at either end.

While I have illustrated the application of the principles of this invention to one known type of slide fastener, it is, nevertheless, to be clearly understood that the principles of this invention are readily applicable to various other forms of slide fastener constructions and to other forms of slide fastener slider pull tabs than those illustrated and described above, which fasteners, sliders and pull tabs may be formed of any suitable material, either metallic, non-metallic or composite.

It is, of course, to be understood that the above described structure is merely illustrative and in no wise limiting and that I desire to comprehend within my invention all modifications included within the scope of the appended claims.

Having thus fully described my invention, what I claim as new and desire to secure by Letters Patent is:

1. In combination, a slide fastener slider having a longitudinal recess in the front wing thereof, and a pull tab member hingedly attached to the upper end of the front wing of said slider body, said pull tab member comprising a substantially flat plate-like body flush with the front surface of said slider body and having its ends flush with the ends of said slider body, and an integral forwardly offset longitudinal strap portion concentrically disposed with respect to said body and forming with said body transverse tension means accommodating slots substantially longer than the width of said body.

2. In combination, a slide fastener slider having a longitudinal recess in the front wing thereof, and a pull tab member hingedly attached to the upper end of the front wing of said slider body, said pull tab member comprising a substantially flat plate-like body flush with the front surface of said slider body and having its ends flush with the ends of said slider body, and an integral forwardly offset longitudinal strap portion concentrically disposed with respect to said body and forming with said body transverse tension means accommodating slots substantially longer than the width of said body, said slots having substantially triangular end portions wedgingly engageable with said tension means for preventing accidental derangement thereof.

NOEL J. POUX.

XD 2/415

~~XD 17/81~~

Sept. 2, 1958 H. ERDMANN 2,849,775

SLIDERS FOR SLIDE FASTENERS

Filed Dec. 16, 1955 2 Sheets-Sheet 1

FIG. 1

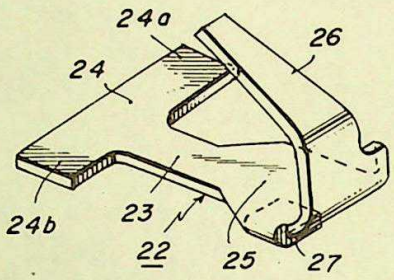


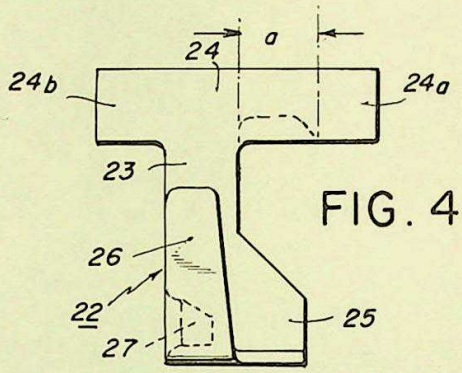


FIG. 4

FIG. 2

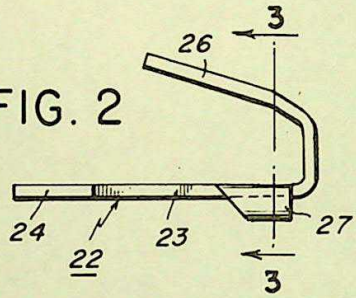


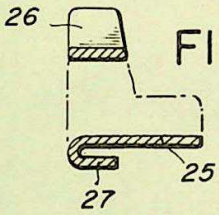


FIG. 3

FIG. 5

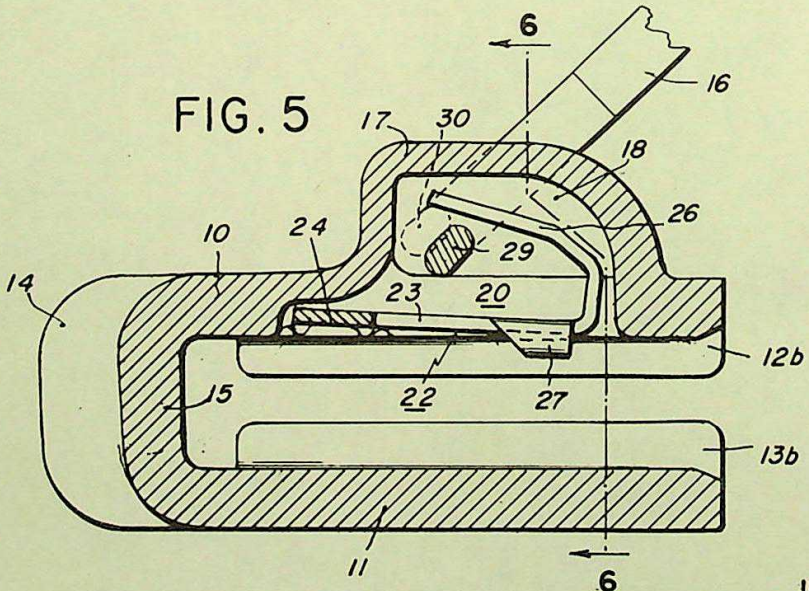


INVENTOR
HANS ERDMANN

BY Harold Kiesque
ATTORNEY

SLIDERS FOR SLIDE FASTENERS

Filed Dec. 16, 1955 2 Sheets-Sheet 2

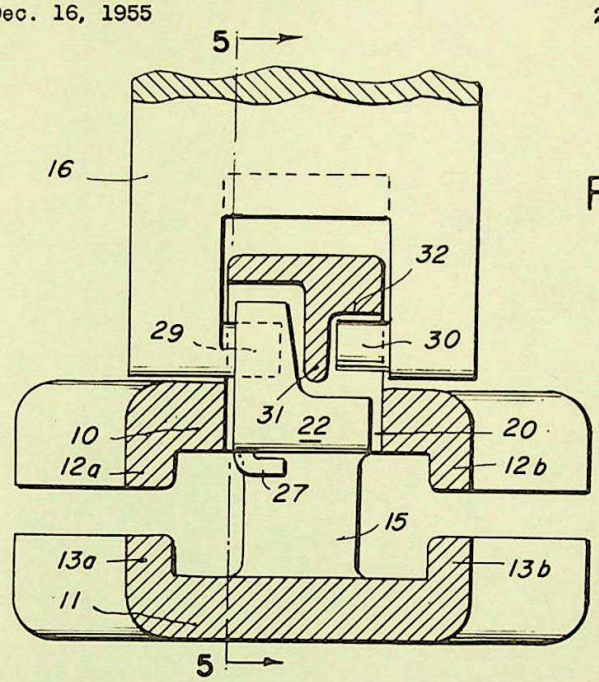


FIG. 6

FIG. 7

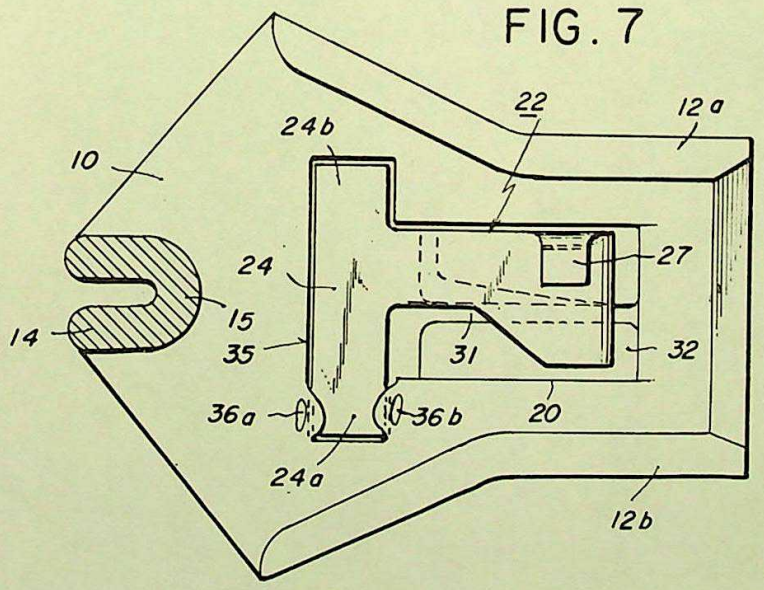


INVENTOR
HANS ERDMANN

BY J. Harold Kiesewe
ATTORNEY

United States Patent Office

2,849,775

Patented Sept. 2, 1958

1

2,849,775

# SLIDERS FOR SLIDE FASTENERS

Hans Erdmann, Maplewood, N. J., assignor to Waldes Kohinoor, Inc., Long Island City, N. Y., a corporation of New York

Application December 16, 1955, Serial No. 553,653

3 Claims. (Cl. 24—205.14)

This invention relates to improvements in sliders for slide fasteners and is more particularly directed to an improved locking spring and a mounting therefor, for use with automatic lock sliders generally as disclosed in my prior Patents Nos. 2,622,296 and 2,622,297, dated December 23, 1952.

Previously, much time and effort have been expended in devising a locking spring for an automatic lock slider which is both sturdy and sensitive. The desideratum is a locking spring which is capable of withstanding the relatively considerable, as well as the continually applied, forces acting to distort it. Also, the spring must be sufficiently sensitive as to be readily operable by the trunnions of the slider pull tab upon the latter being manipulated to lift the locking pin from its locking position, and it must also be capable of returning said pin positively yet easily and smoothly to its locking position when the pull tab is released to assume its normal lowered position.

A main object of the present invention is the provision of an automatic lock slider incorporating an improved locking spring whose design and mounting are such that it effectively satisfies the conflicting requirements of such a locking spring as explained above.

More particularly, an object of the invention is to provide a construction and mounting of locking spring for use with automatic lock sliders which is based on the discovery that when a leaf spring acts in torsion, it possesses the necessary strength and toughness on the one hand, and sensitivity on the other, as makes it ideally suited for use as the locking spring of an automatic lock slider.

Another object of the invention is the provision of an automatic lock slider incorporating a locking spring having a leaf-spring arm, one end of which is secured to the slider front wing, and an inclined lifting arm extending integrally from its other end and being liftable by at least one trunnion of the slider pull tab as the latter is manipuated to actuate the slider in fastener opening direction, which is characterized in that the leaf-spring arm is so secured that it acts in torsion responsively to the pull tab trunnion applying a lifting force on the lift arm.

Yet another object of the invention is the provision of an automatic lock slider incorporating an improved locking spring as aforesaid and which is further characterized by the secured end of the leaf-spring arm being offset laterally from the arm proper, whereby said leaf-spring arm is in effect twisted about a longitudinal axis upon the lifting arm of the spring being lifted by manipulation of the pull tab in fastener-opening direction.

The above and other objects and advantages of the improved lock-slider spring and novel mounting therefor according to the present invention will appear from the following detailed description, in which reference is had to the accompanying drawings illustrating the improved spring applied to an automatic lock slider of the type disclosed in my prior aforesaid Patent 2,622,297, in which:

2

Fig. 1 is a perspective view of the improved locking spring for a lock slider as herein proposed;

Fig. 2 is a side view of the spring shown in Fig. 1;

Fig. 3 is a section taken along line 3—3 of Fig. 3;

Fig. 4 is a top plan view of the improved locking spring shown in Fig. 1 and which further indicates the zone of the leaf-spring arm which is subjected to torsion;

Fig. 5 is a longitudinal section through an automatic lock slider incorporating the improved locking spring of the invention, the view being taken on line 5—5 of Fig. 6;

Fig. 6 is a transverse section taken through the slider illustrated in Fig. 5 on line 6—6 thereof; and

Fig. 7 is a horizontal section taken through the slider shown in Fig. 5 on line 7—7 thereof, the view further affording a plan view looking onto the underface of the slider front wing.

In the drawings, the improved locking spring of the invention has, in the interest of simple disclosure, been illustrated as applied to an automatic lock slider as generally disclosed in my aforementioned prior Patent 2,622,297. Referring to Figs. 5, 6 and 7 herein, such a slider comprises a front wing **10** and a rear wing **11**, both provided with facing side-edge flanges **12*a***, **12*b*** and **13*a*** and **13*b*** as indicated, and being connected in spaced, parallel relation by a neck portion **14** having an inward projection **15** which, as is well known, serves as a divider for disengaging and thereupon separating the interengaged fastener elements moving relatively through the slider channel when pull in fastener-opening direction is applied to pull tab **16**. A bail **17** serving to connect said pull tab to the slider body is struck out from the material of the front wing **10**, the bail being shaped to form an elongated eye **18**. The aforesaid formation of the bail leaves an opening **20** in the slider front wing which interconnects the eye **18** and the slider channel. Said opening also provides for the accommodation of the improved locking spring of the invention which is designated **22**.

Generally speaking, said locking spring **22** corresponds to the locking spring of the automatic lock slider disclosed in my above Patent 2,622,297 in that it is generally U-shaped when viewed from the side, as in Fig. 2. More particularly, said locking spring comprises a leaf-spring arm **23** terminating at one end in a cross bar formation **24** and having its other or free end widened as at **25**, and thereupon merging into an upwardly-outwardly inclined lifting arm **26** which, by reference to Fig. 4, is offset to one side of the longitudinal center line of the locking spring considered as a whole. Near its free end, the leaf-spring arm **23** is provided with a depending locking pin **27** which, as is well understood, is adapted in the normal unstressed position of the spring to enter the space between any two adjacent fastener elements of the fastener then disposed in the slider channel immediately below same.

As best seen in Fig. 6, the pull tab **16** is connected to the slider body by means of trunnions **29**, **30** which project from opposite sides into the eye **18** of the aforesaid bail **17**. Due to the elongation of the eye, the pull tab, in addition to its usual pivotal movement, is also permitted limited longitudinal movement with respect to the slider. To positively guide the pull tab in its longitudinal movement aforesaid, the eye of the bail is divided into longitudinal side compartments by means of a longitudinal rib **31** depending inwardly from the under surface of the bail into the space between the trunnions **29** and **30**. Whereas one side compartment of the eye **18** has normal depth as required to accommodate the lifting arm **26** of the locking spring in addition to the trunnion **29**, the other side compartment has reduced depth which is only slightly greater than the major diameter of the opposite or companion trunnion **30**, as results from the bail to the right

of the rib 31 having the increased thickness as is shown in Fig. 6. Said figure also shows the under surface 32 of the bail which defines the top edge of the eye compartment for trunnion 30 to be formed as a straight guide track on which said trunnion may bear as the pull tab partakes of its longitudinal movement. As explained in my aforesaid patent, such rib and track construction is of advantage in positively preventing uncontrolled movement of the pull tab as might result in the trunnion 29 moving into the space between the bail and lifting arm 26 of the spring, which, of course, would destroy the effectiveness of the latter.

Reverting to the locking spring 22, the cross bar end 24 of its leaf-spring arm 23 seats in a correspondingly shaped recess 35 which opens through the under face of front slider wing 10 and is also in communication with the front wing opening 20. Thus, the locking spring is adapted to be assembled from the under-face side of the front wing. When so assembled, the leaf-spring arm 23 of the spring is accommodated within the section of the slider front wing, its locking pin 27 normally depends into the slider channel, and its inclined lifting arm 26 extends forwardly through the front wing opening 20 into the eye 18 of the bail 17, wherein it is disposed outwardly of the pull tab trunnion 29. Accordingly, upon the operator lifting the pull tab 16 to actuate the slider in fastener-opening direction, the trunnion 29, by its camming action on the spring arm 26, flexes said leaf-spring arm 23 forwardly, and thereby lifts the locking pin 27 out of its normal locking engagement with fastener elements then within the slider body.

According to the invention, the locking spring 22 is specially secured and anchored to the slider front wing 10 so that when its lifting arm 26 is engaged and thereupon lifted by trunnion 29 as aforesaid, its leaf spring arm is placed in torsion; that is to say, it is twisted longitudinally about its point of securement. By reference to Fig. 7, such is simply achieved by securing only the one end portion 24*a* of the aforesaid cross bar termination 24 of the leaf-spring arm 23 which is disposed to the opposite side of the spring center line from said lifting arm 26, to the slider front wing 10. Preferably, this securement is effected by peening the material of the wing which extends along the edges of the recess 35 in which the cross bar seats over onto said cross-bar end portion 24*a* at the opposite points indicated at 36*a*, 36*b*. Since the spring-leaf arm 23 is anchored only as aforesaid, analysis will show that as the trunnion 29 imposes a lifting force on the lift arm 26 of the spring, the leaf-spring arm thereof is placed in torsion. More particularly, said arm 23 tends to twist about a longitudinal line or axis extending through the zone designated *a* of the spring (Fig. 4) which lies intermediate the anchored terminus of the cross bar 24*a* and the leaf-spring arm proper.

Theoretical considerations, corroborated by actual tests, established that a locking spring anchored as aforesaid so that its leaf-spring arm is placed in torsion when a lifting force is applied to its lifting arm is particularly capable of satisfying the requirements as to sturdiness and sensitivity of locking springs used in automatic lock sliders of the type under consideration. Actually, consequent to the substantially increased sensitivity of the locking spring as a whole, locking pin 27 may be simply folded in under the broadened end of the leaf-spring arm 23 from which it extends, rather than depending vertically from said arm as in a locking spring according to my prior patent aforesaid.

It is also to be noted that the anchoring end portion



24*a* of the cross bar 24 of the locking spring may be and preferably is formed longer than the opposite cross-bar end portion 24*b*, since the latter portion serves principally to insure against any bodily displacement of the locking spring as a whole. As a matter of fact, the shorter cross-bar end 24*b*, although advisable for practical reasons, is not necessary to the invention and may be eliminated if such is considered desirable for ease in manufacturing and/or to suit the needs of a particular slider application, the longer cross-bar 24*a* in such case acting as a laterally extending offset formed on the anchoring end of the locking spring

Without further analysis, it will be appreciated that the improved locking spring and mounting as taught by the present invention achieves the objectives therefor as set forth in the foregoing. However, as any changes could be made in carrying out the above constructions without departing from the scope of the invention, it is intended that all matter contained in the above description or shown in the accompanying drawings should be interpreted as illustrative and not in a limiting sense.

I claim:

1. An automatic lock slider for slide fasteners comprising front and rear slider wings connected at their upper ends by a neck and cooperating therewith to define a slider channel, a bail extending from the front wing and forming therewith an elongated eye, a pull tab having at least one trunnion extending into the eye and providing a pivotal connection between said pull tab and front wing, a generally U-shaped locking spring including a longitudinal leaf-spring arm operatively associated with the upper wing, a lifting arm extending forwardly from the free end of the leaf-spring arm into the eye and being disposed therein between the bail and the trunnion whereby to be liftably engageable by said trunnion, and a locking pin depending in the opposite direction from said free end of the leaf-spring arm and normally projecting into the slider channel but retractible therefrom responsively to flexing of the leaf-spring arm as results from lifting of said lifting arm, the other end of the leaf-spring arm having a laterally extending offset portion, and securing means operative between said front wing and said offset portion, said securing means providing the sole securement for the locking spring as a whole whereby the leaf-spring arm thereof is placed in torsion responsively to said trunnion imposing a lifting force on said lifting arm of the leaf-spring.

2. An automatic lock slider as set forth in claim 1, wherein said offset portion comprises one arm of a cross bar formed on said other end of the leaf-spring arm.

3. An automatic lock slider as set forth in claim 1, wherein said offset portion comprises one arm of a cross bar formed on said other end of the leaf-spring arm, and said securing means is effective on the terminal portion of said one arm and thereby at a location thereof which is disposed well to the side of the longitudinal center line of the locking spring as a whole.


**References Cited** in the file of this patent

UNITED STATES PATENTS

| | | |
|---|---|---|
| 2,423,210 | Ulrich | July 1, 1947 |
| 2,622,296 | Erdmann | Dec. 23, 1952 |
| 2,622,297 | Erdmann | Dec. 23, 1952 |

FOREIGN PATENTS

| | | |
|---|---|---|
| 649,141 | Germany | Aug. 20, 1937 |
| 1,049,534 | France | 1953 |